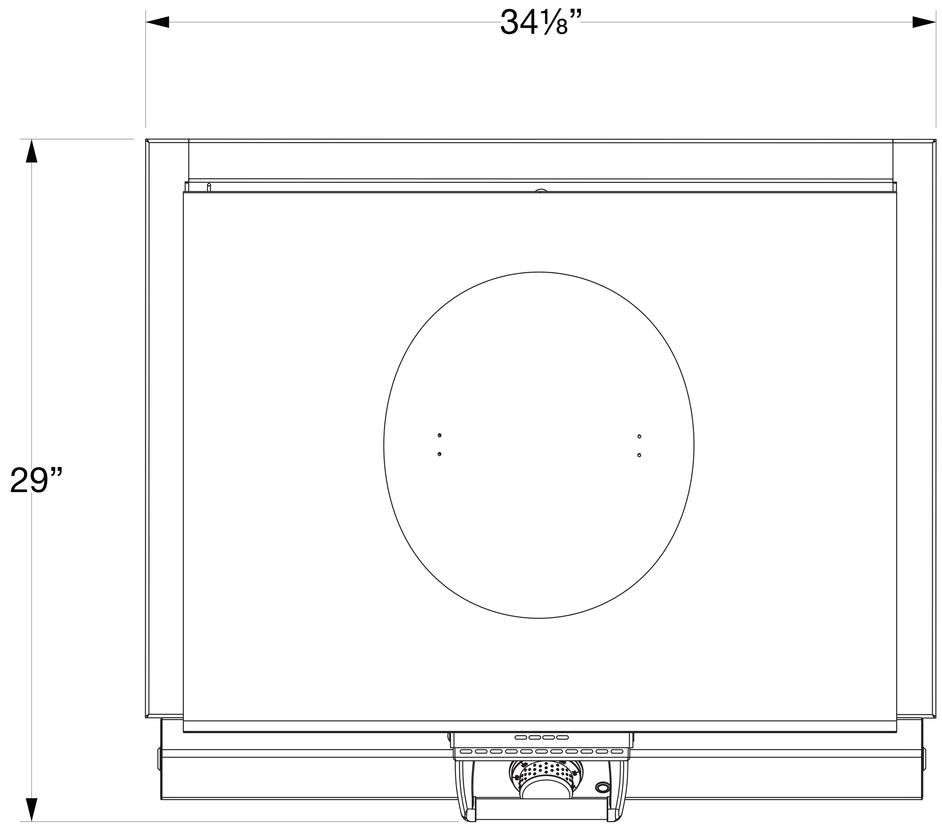

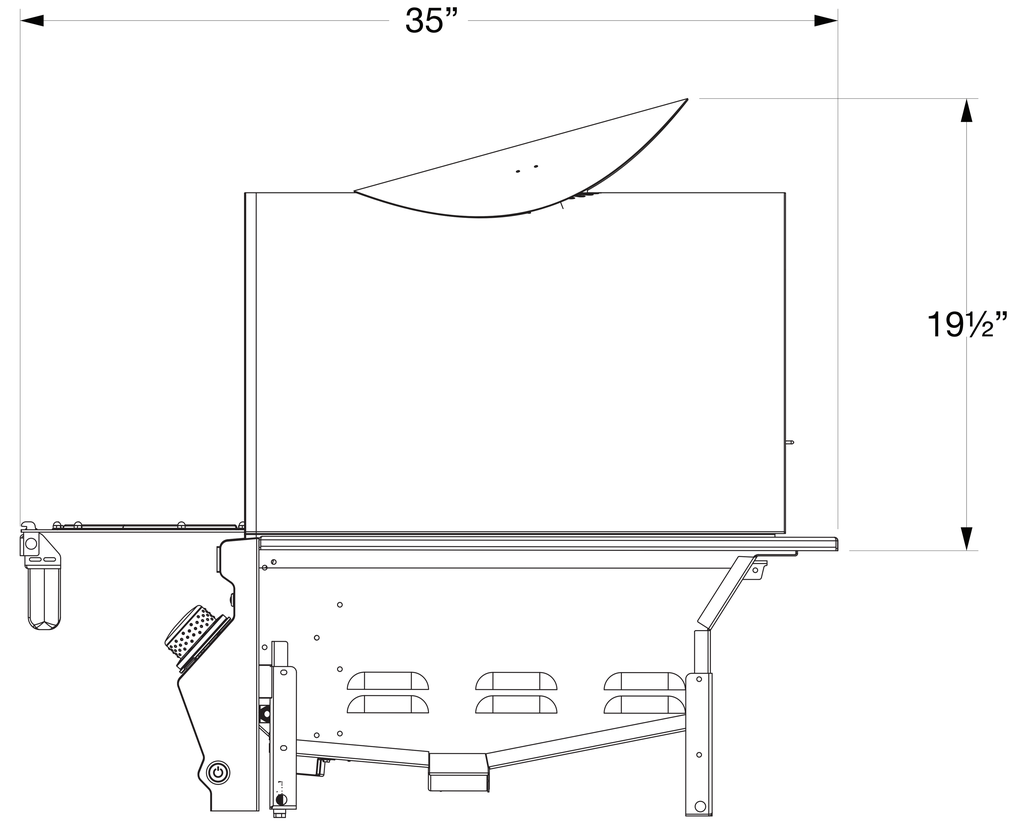

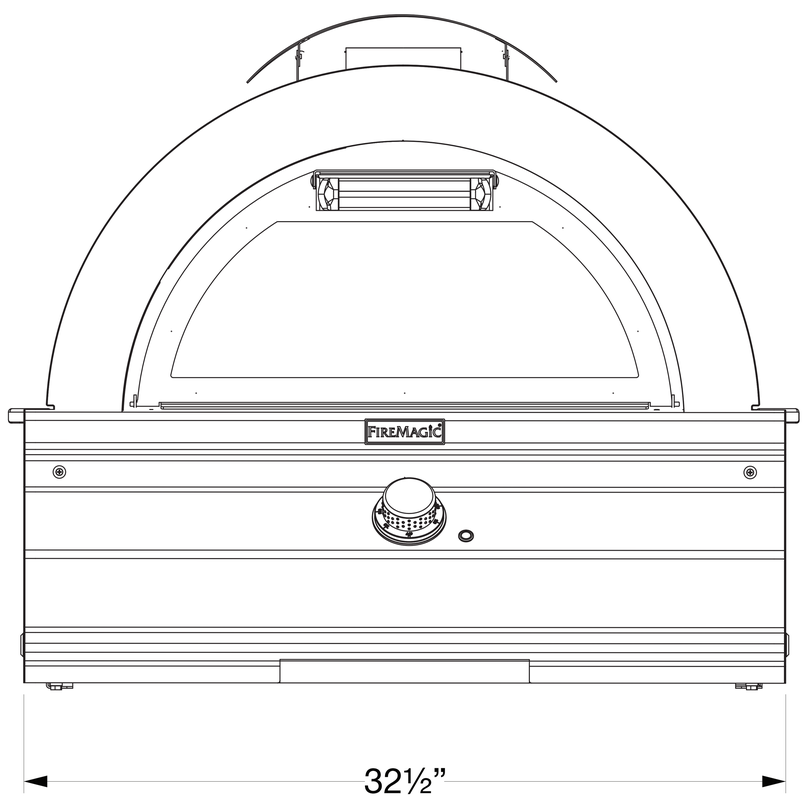

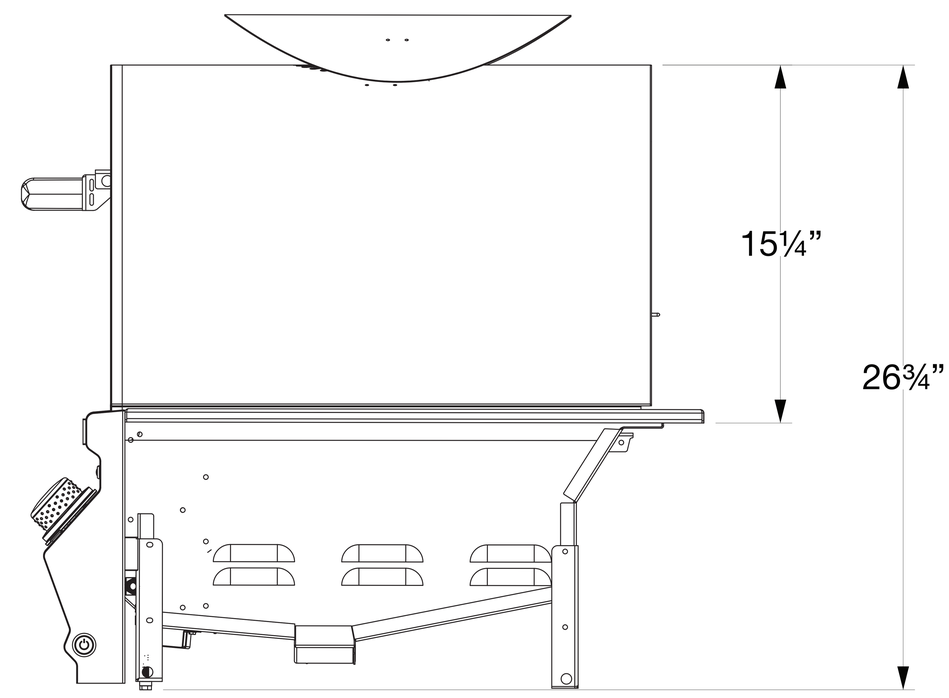

FIREMAGIC®

4600(P)

Aurora Built-In Pizza Oven