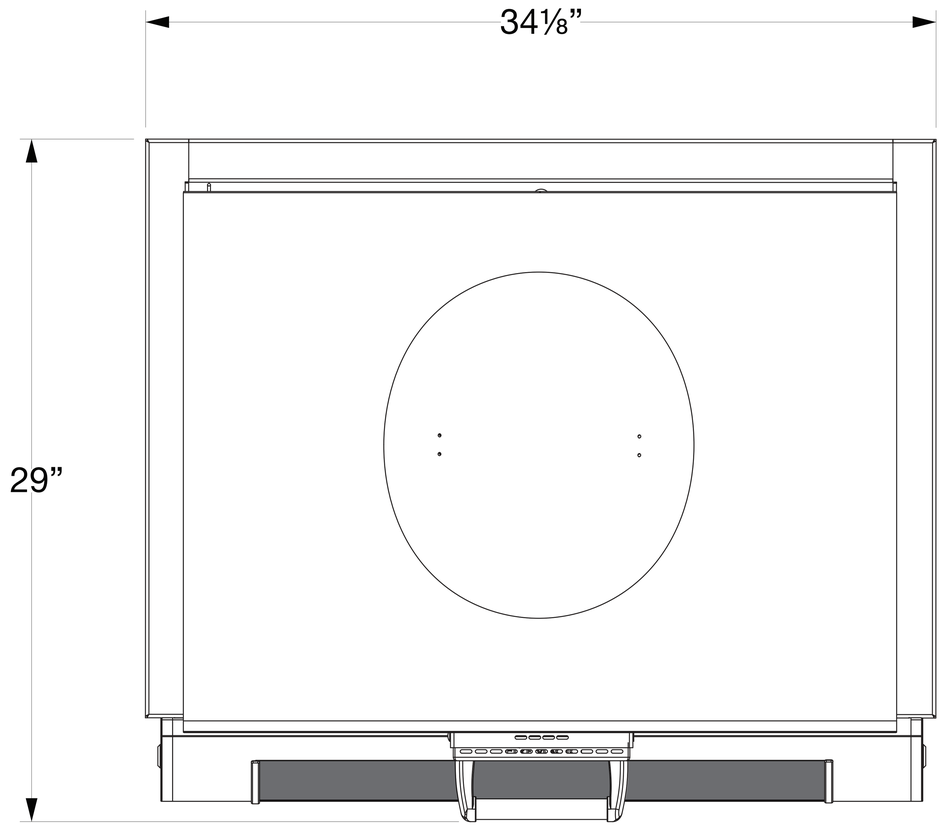

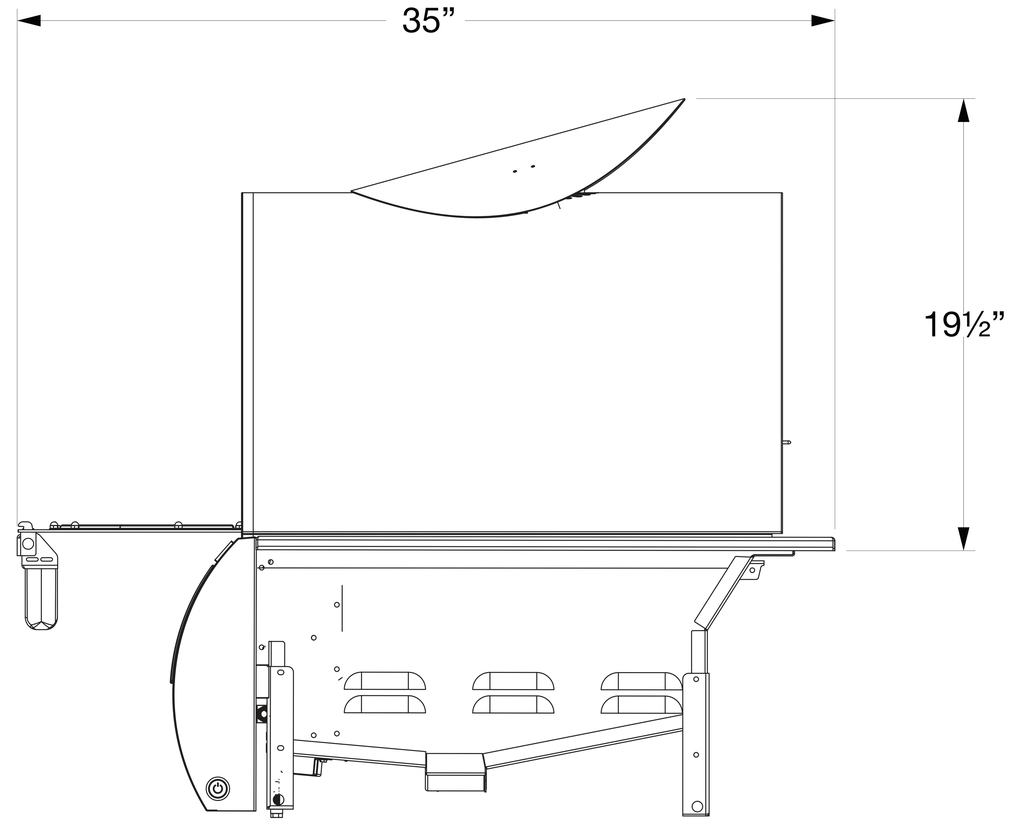

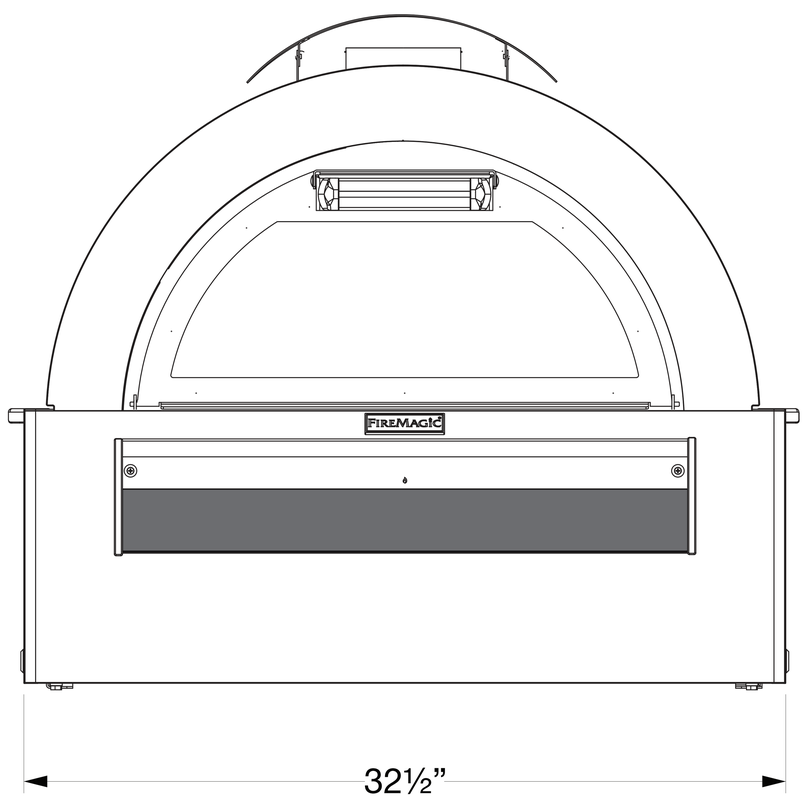

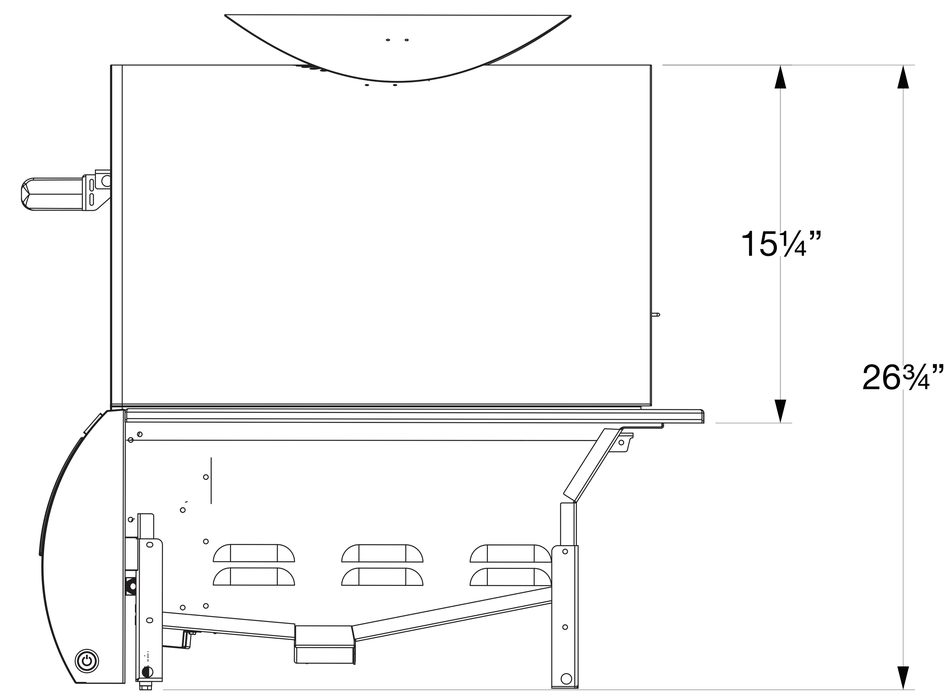

FIREMAGIC

5660(P)
Echelon Built-In Pizza Oven