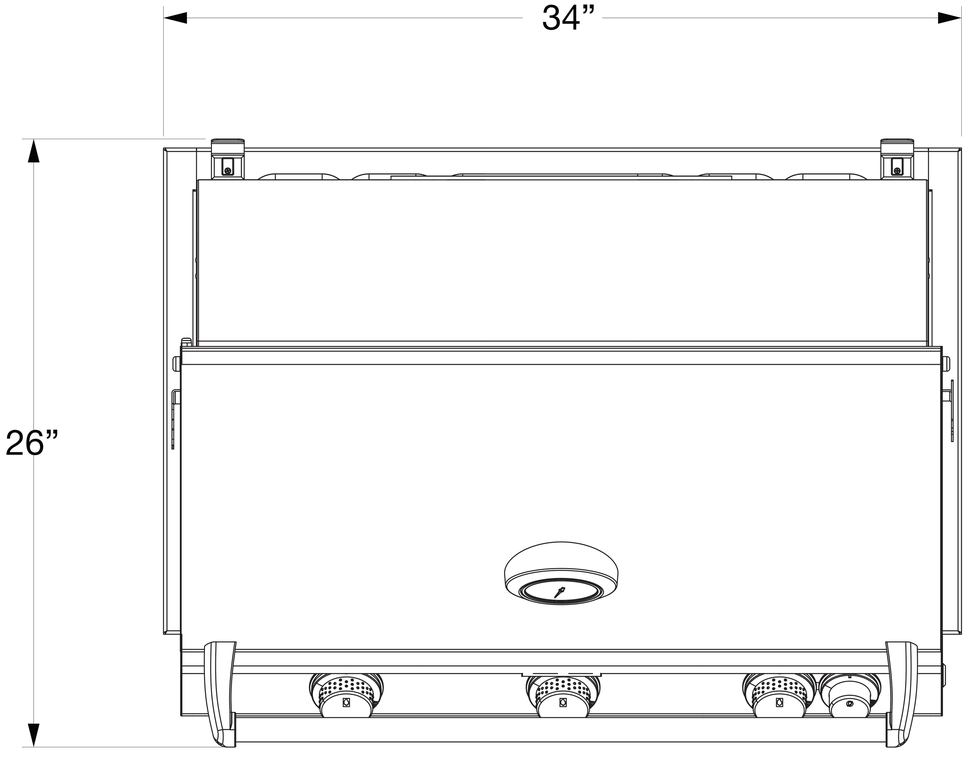

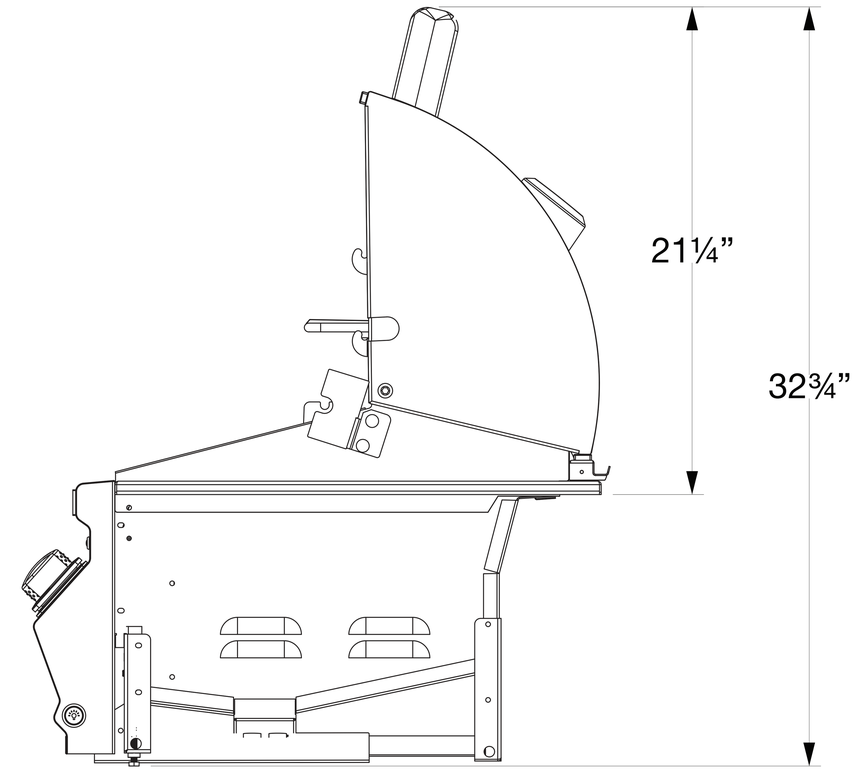

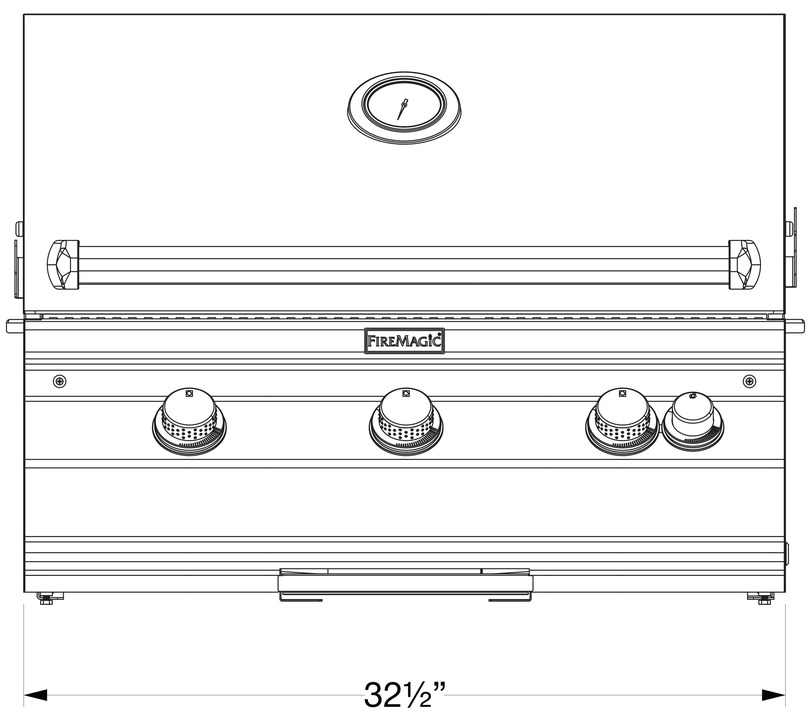

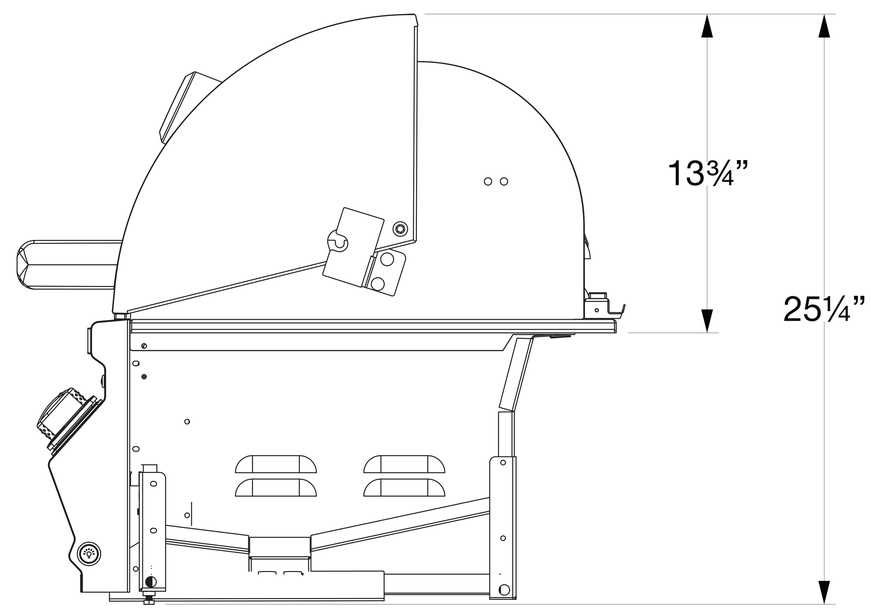

FIREMAGIC

A540i-8EAN(P) & A540i-7EAN(P)
34″ Aurora Built-In Grill
(with & without Backburner & Rotisserie Kit)