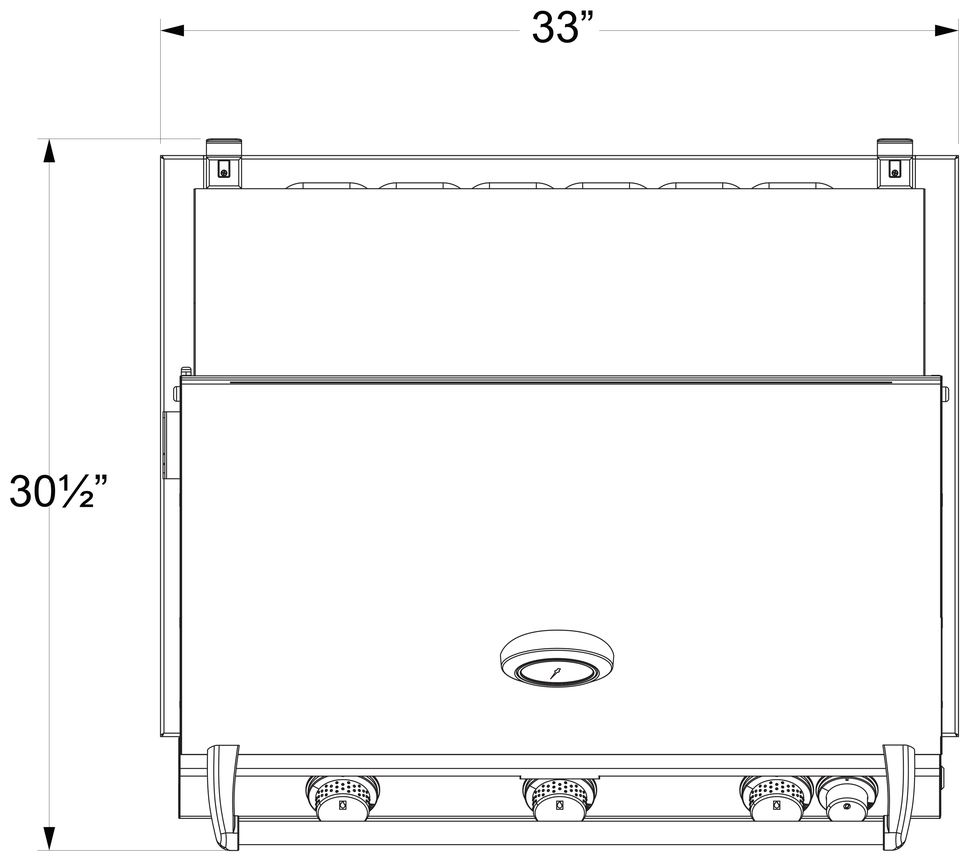

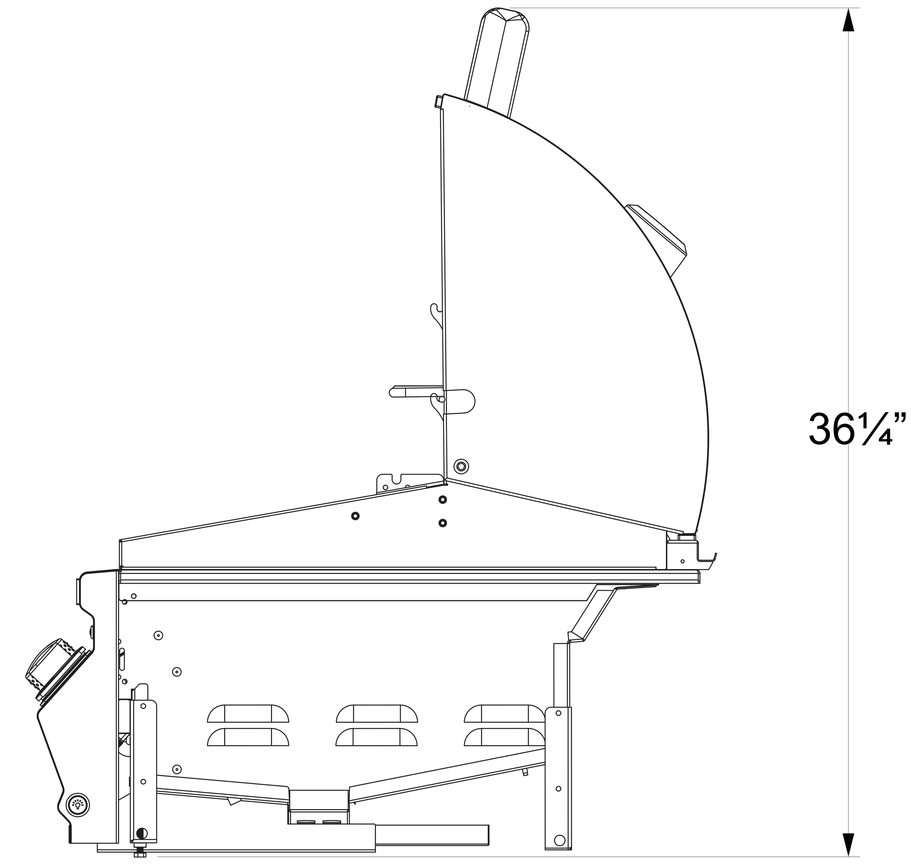

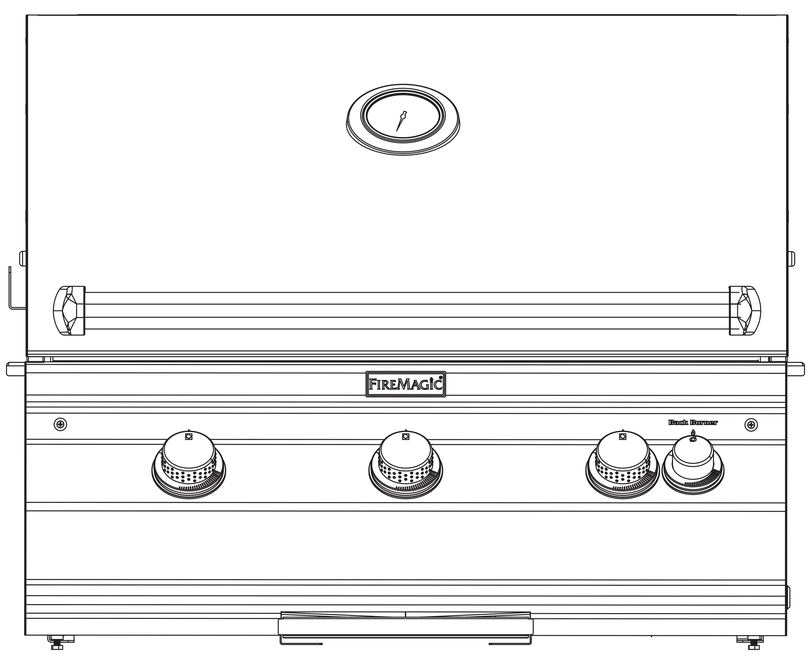

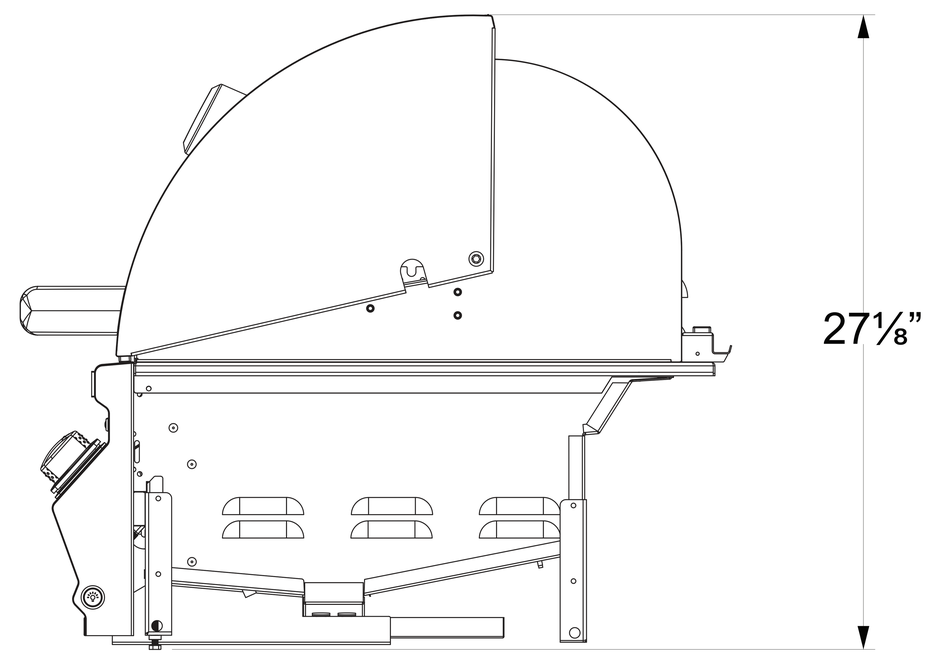

FIREMAGIC

A660i-8EAN(P) & A660i-7EAN(P)
34″ Aurora Built-In Grill
(with & without Backburner & Rotisserie Kit)