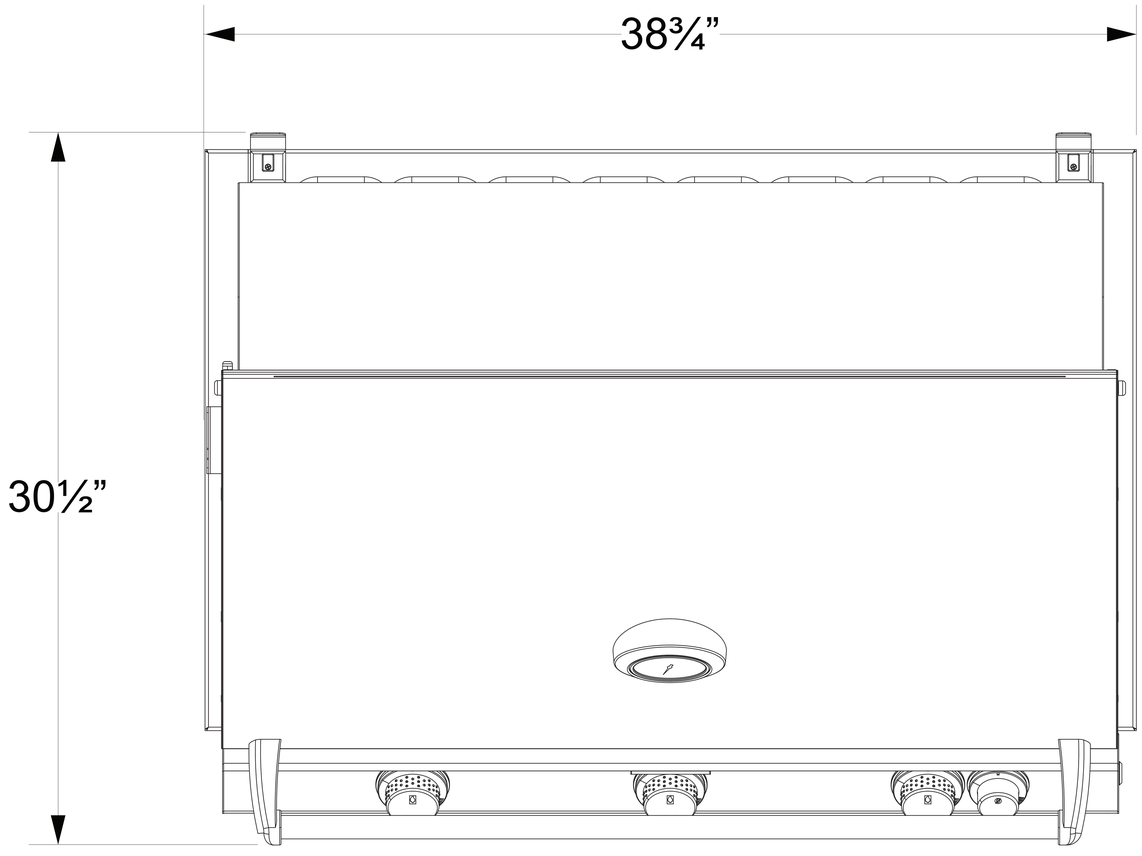

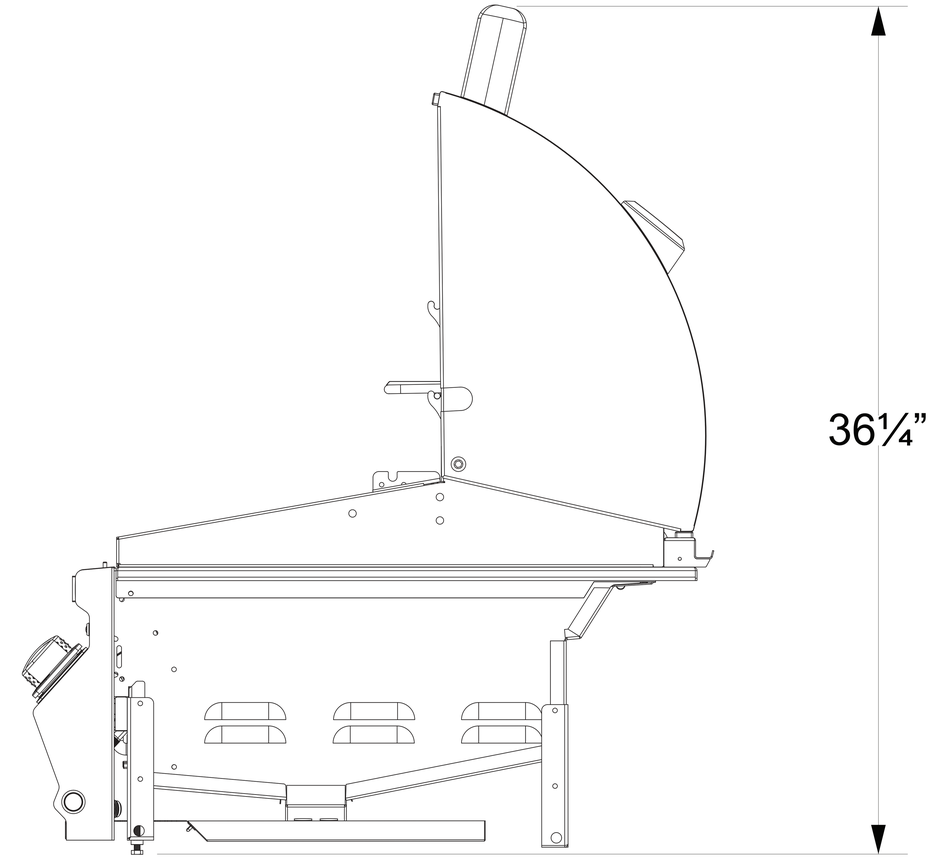

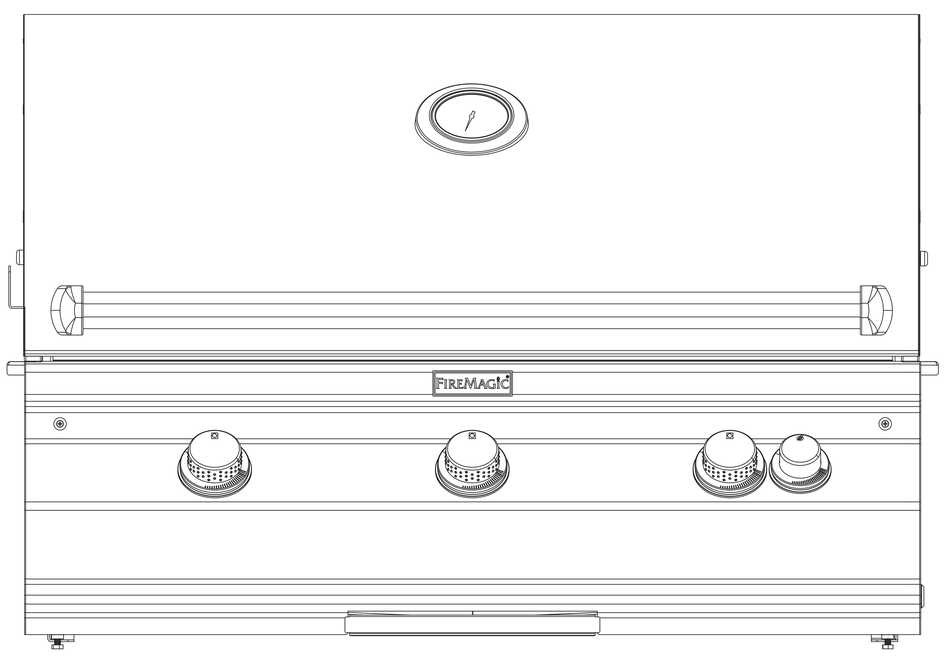

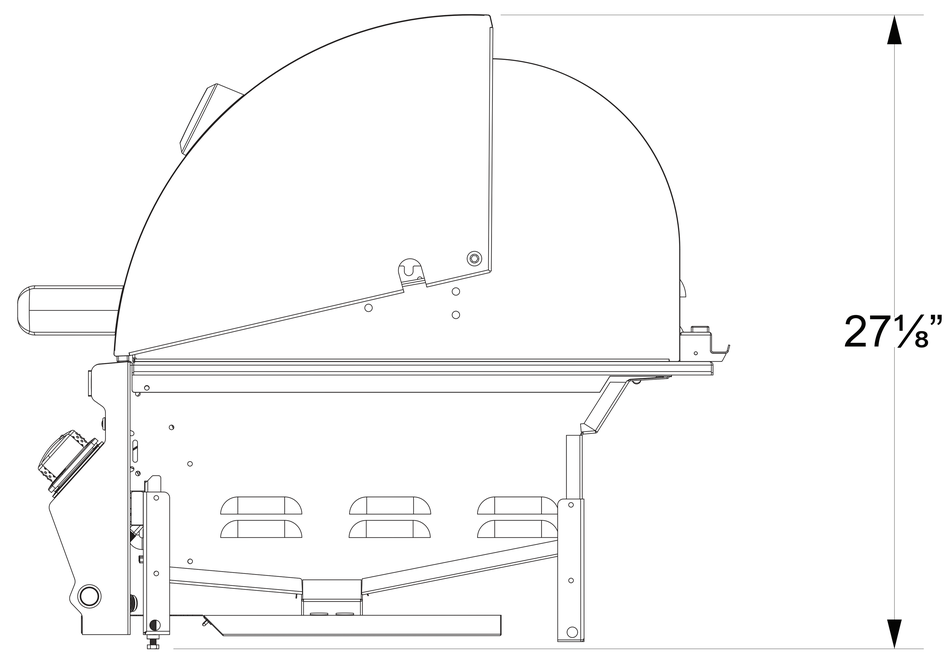

FIREMAGIC

A790i-8EAN(P) & A790i-7EAN(P)
40″ Aurora Built-In Grill
(with & without Backburner & Rotisserie Kit)