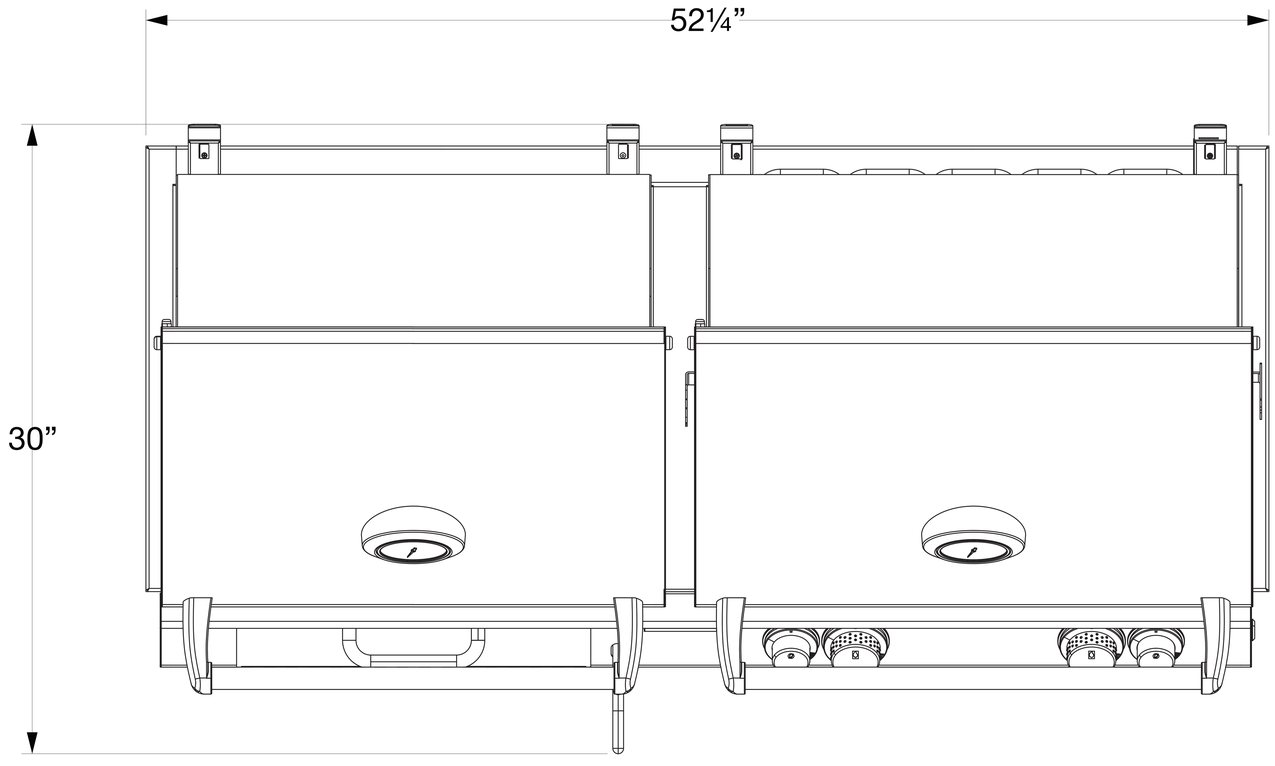

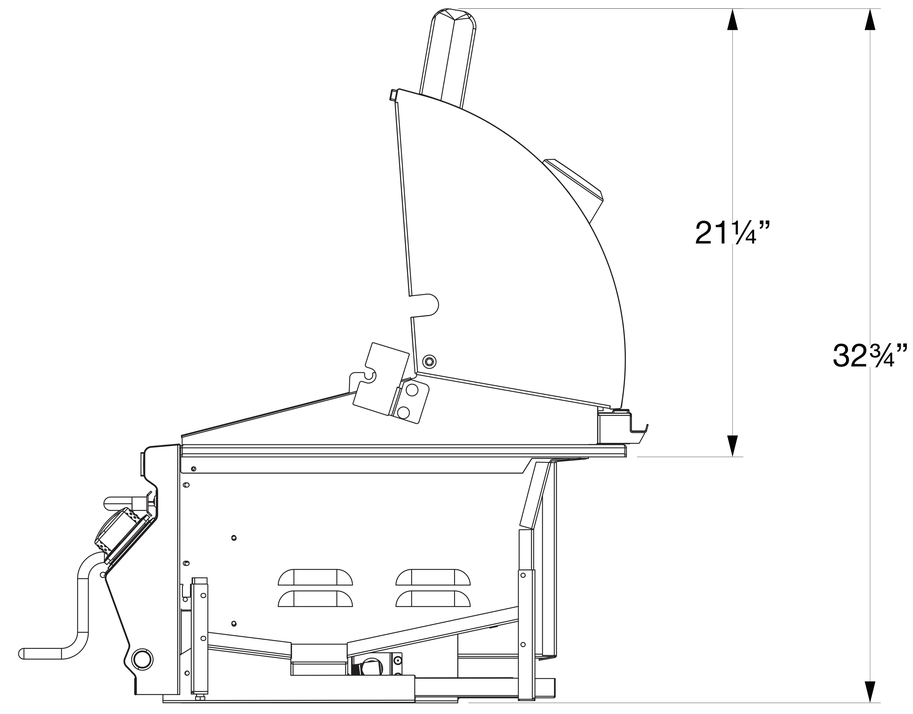

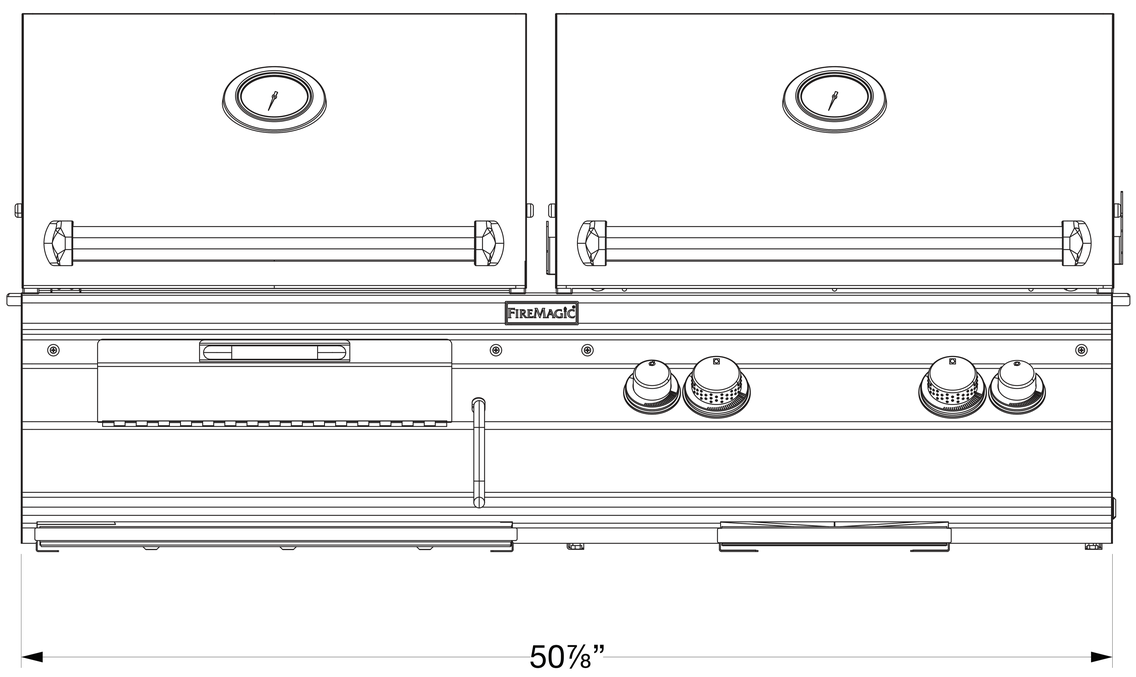

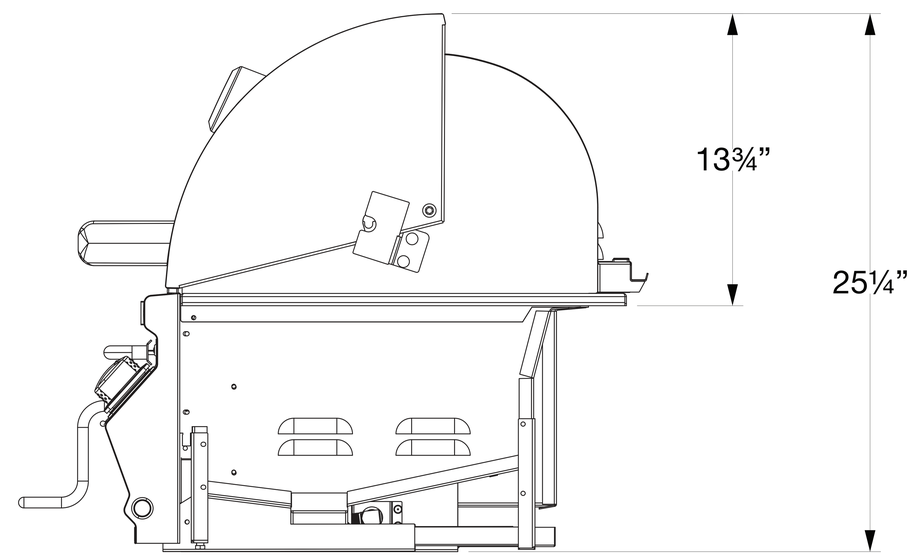

FIREMAGIC

A830i-8EAN(P)-CB & A830i-7EAN(P)-CB
Aurora Gas/Charcoal Combo Built-In Grill
(with & without Backburner & Rotisserie Kit on the gas side)