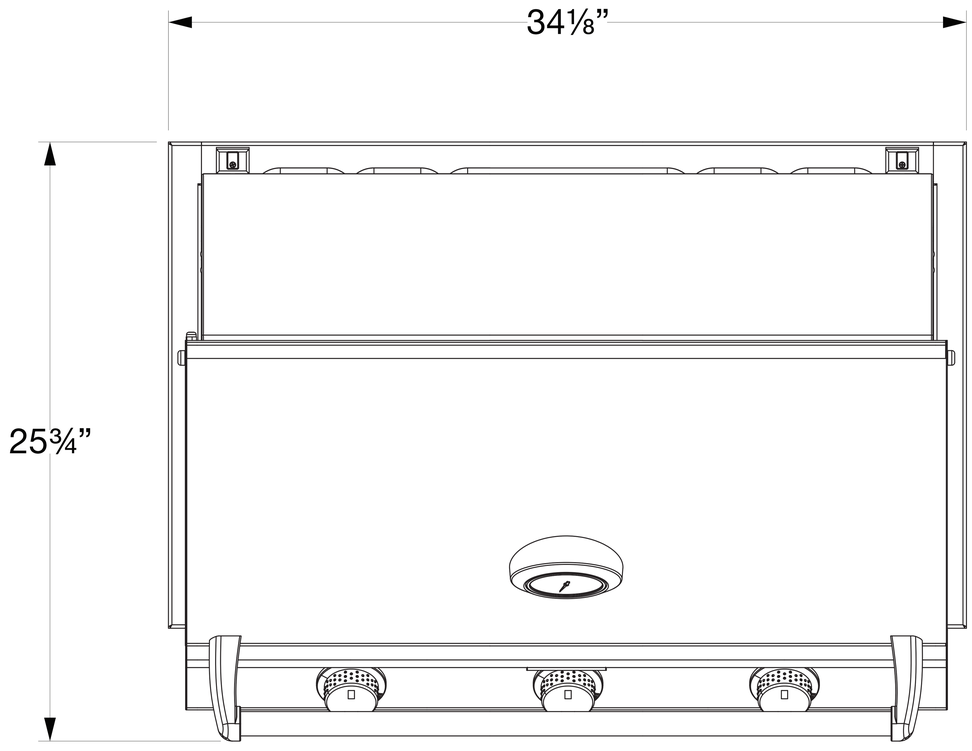

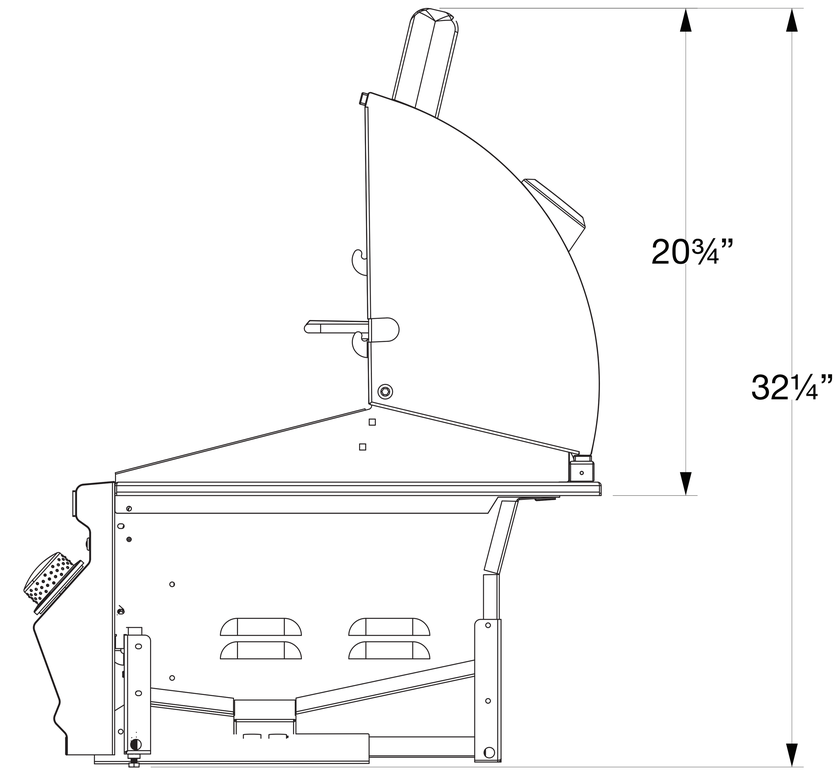

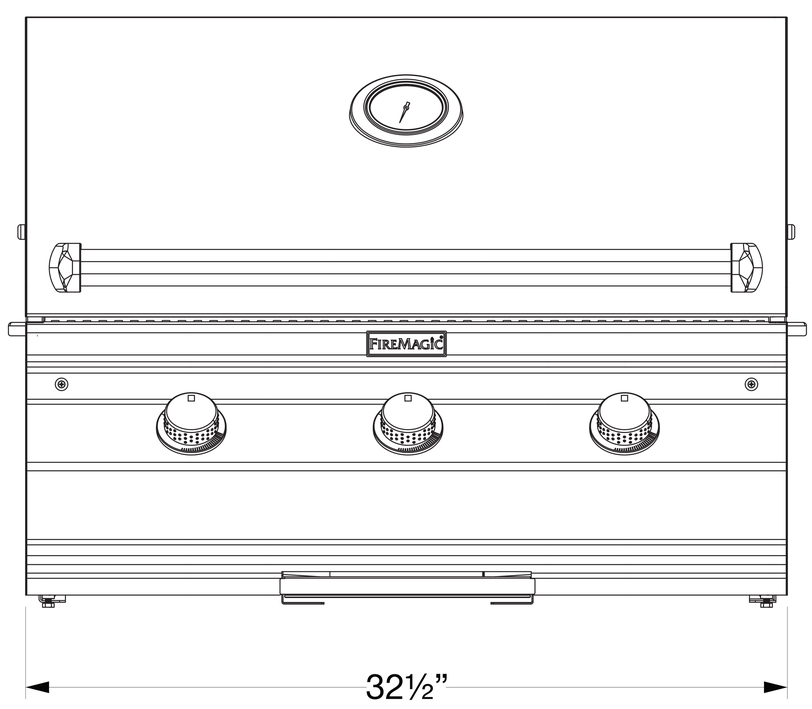

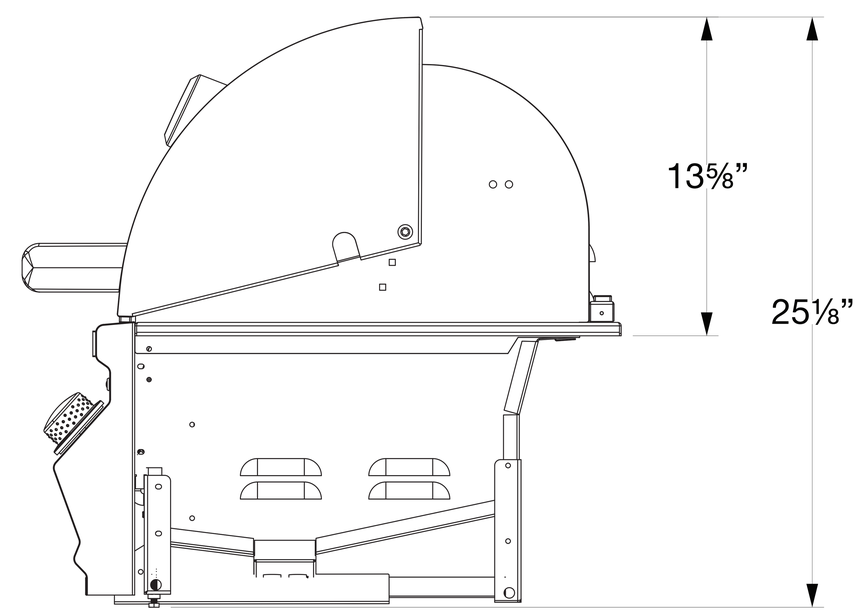

FIREMAGIC

C540i-RT1N(P) & CM540i-RT1N(P)

34″ Choice Built-In Grill (Residential & Multi-User)