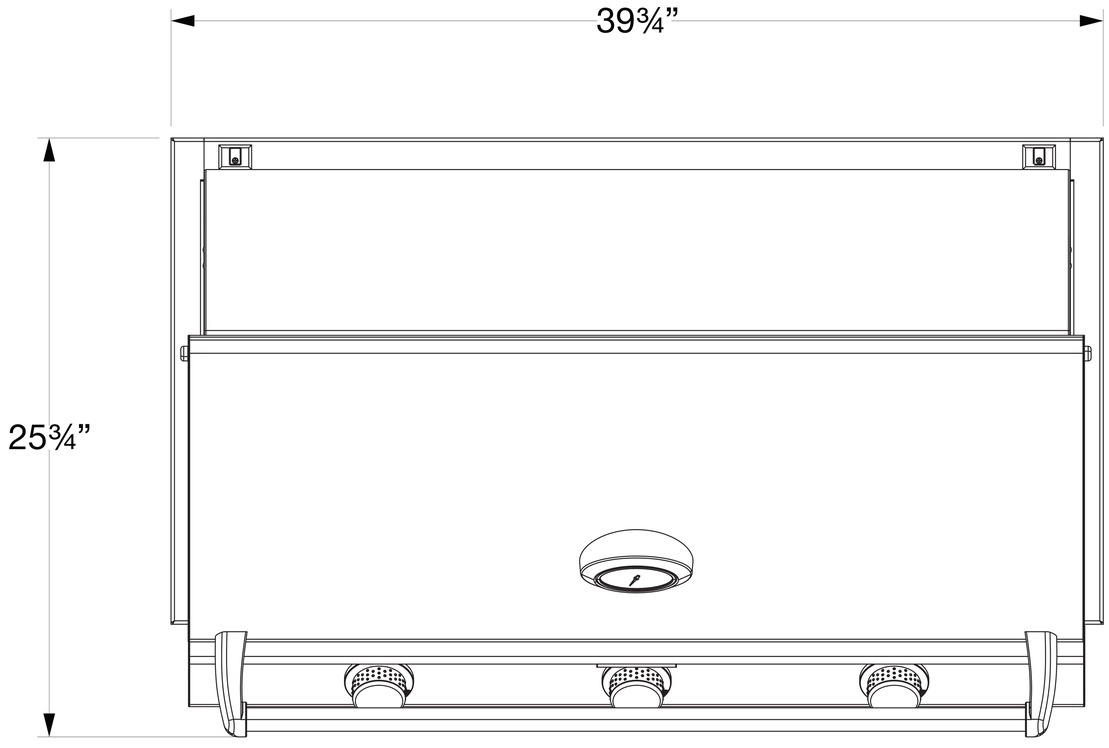

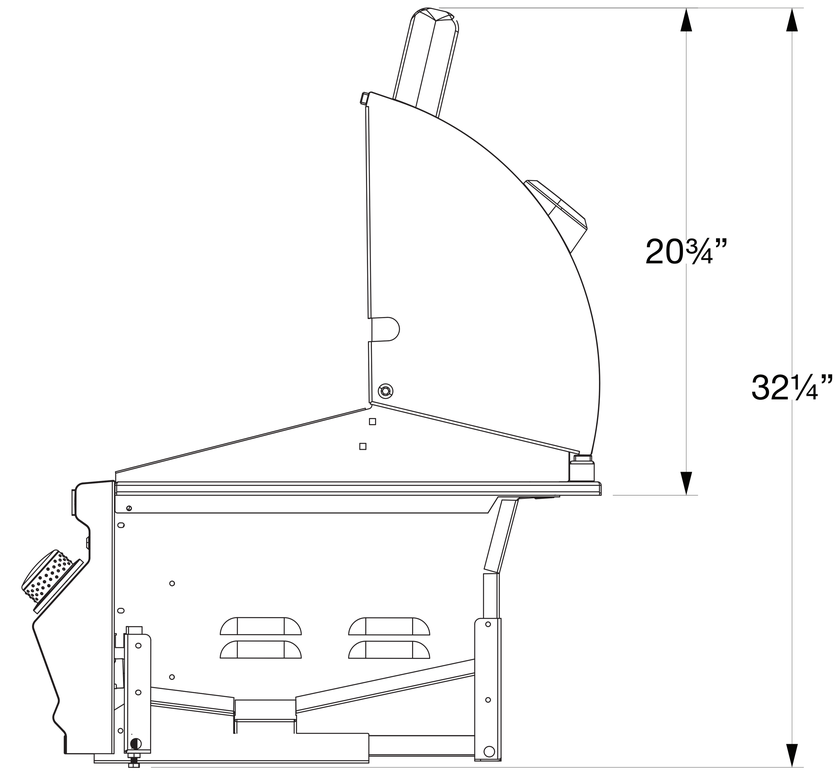

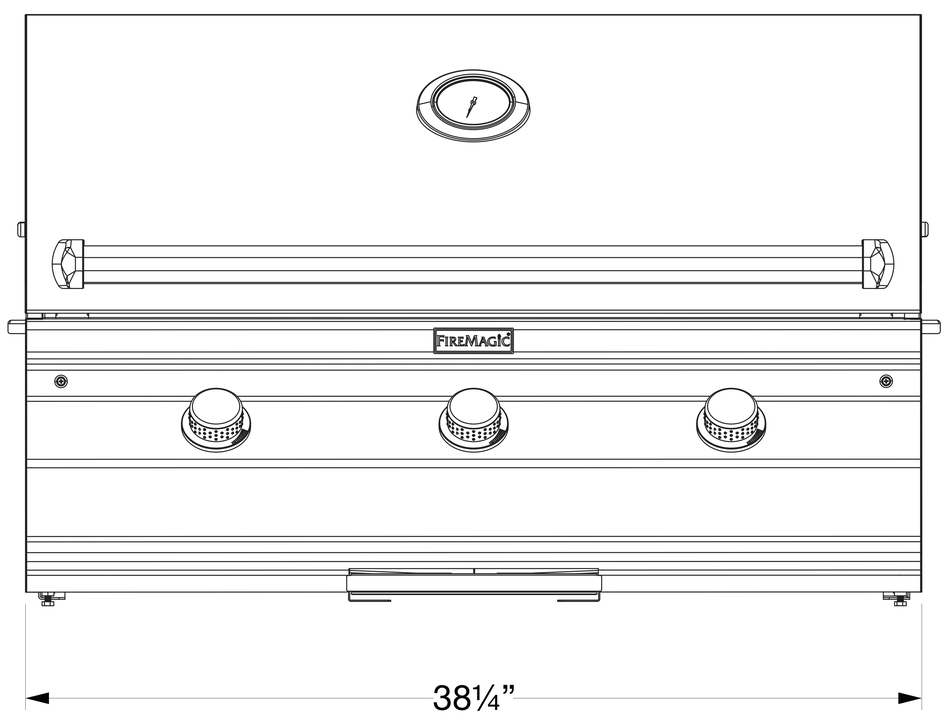

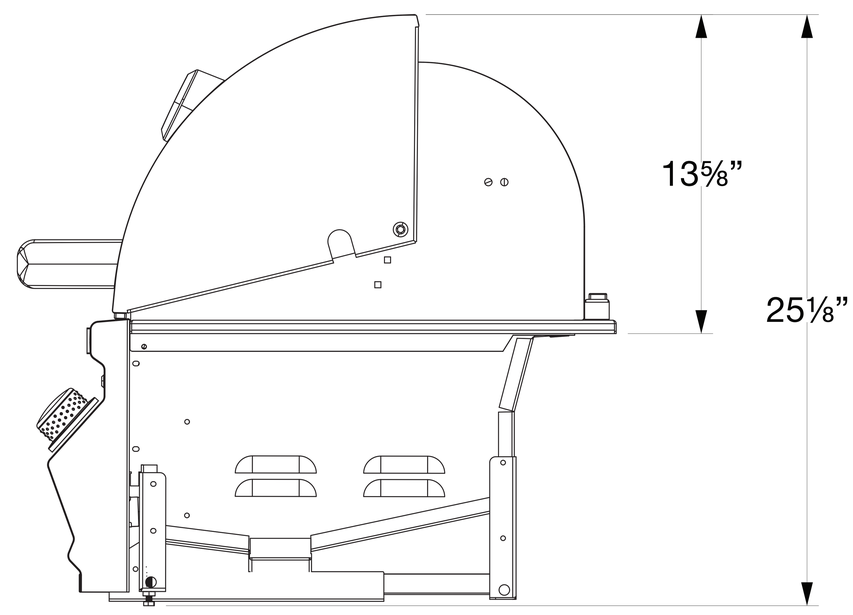

FIREMAGIC

C650i-RT1N(P) & CM650i-RT1N(P)

40″ Choice Built-In Grill (Residential & Multi-User)