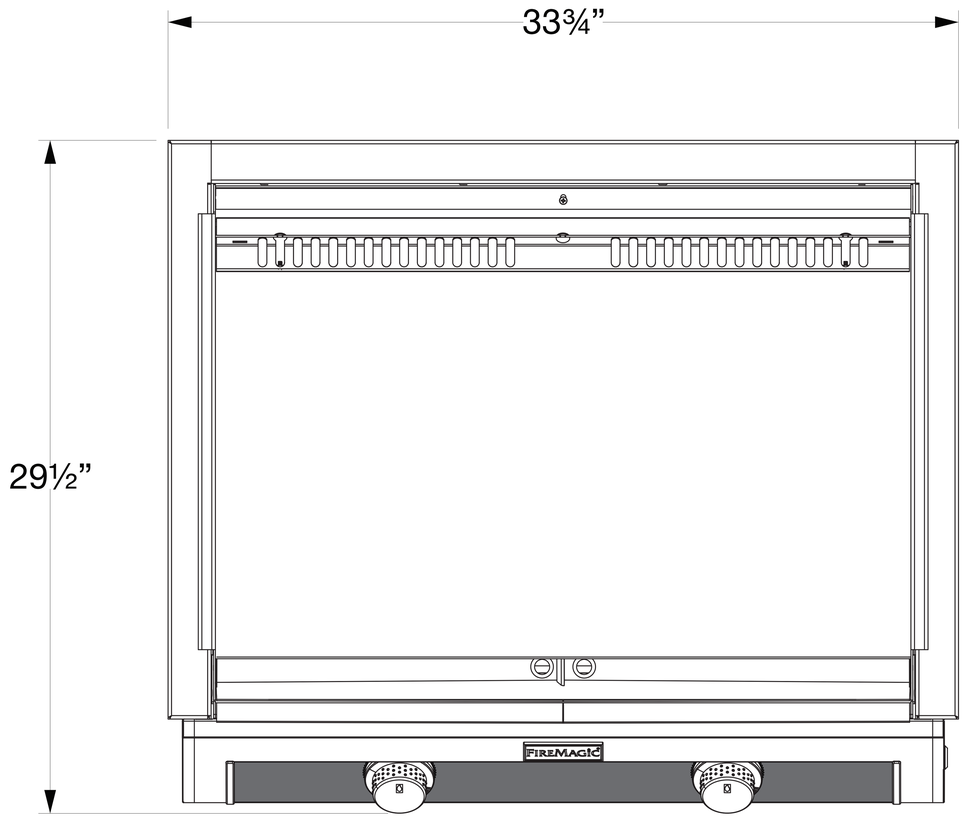

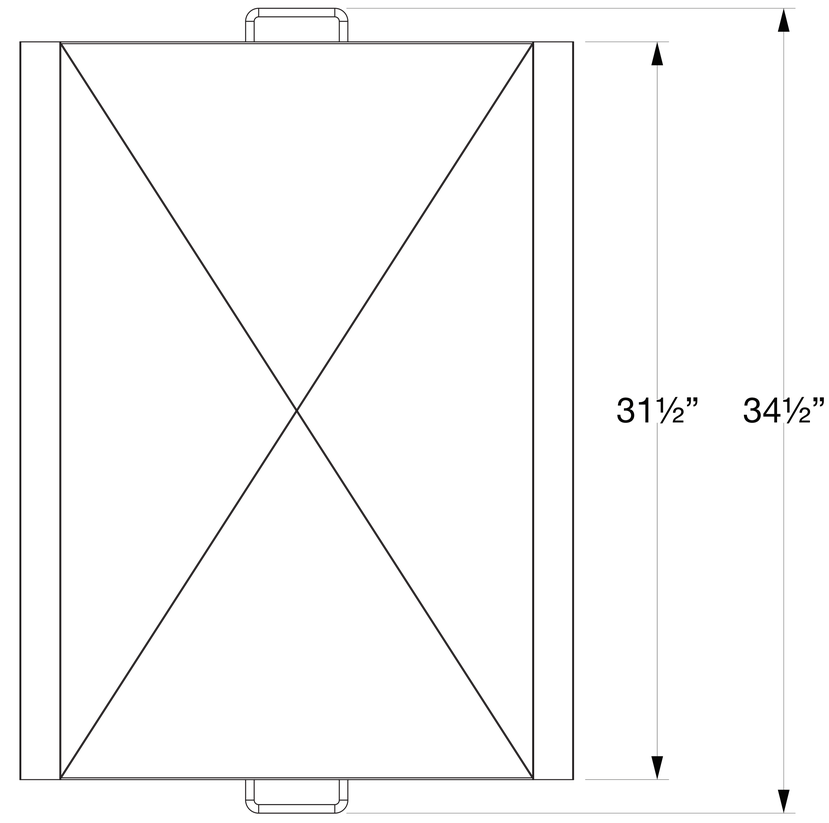

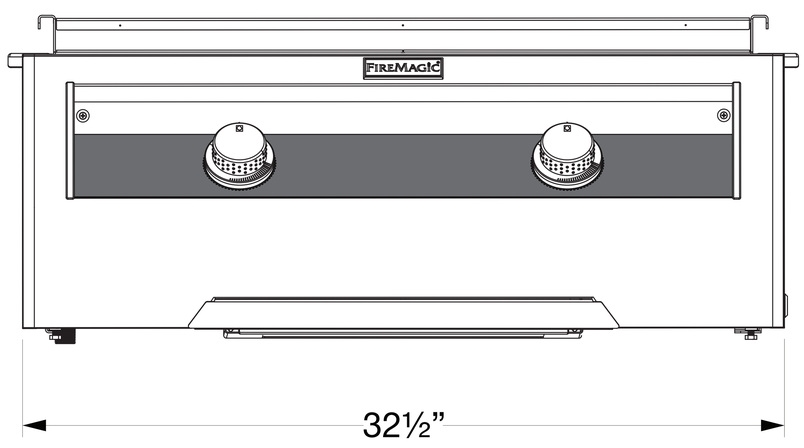

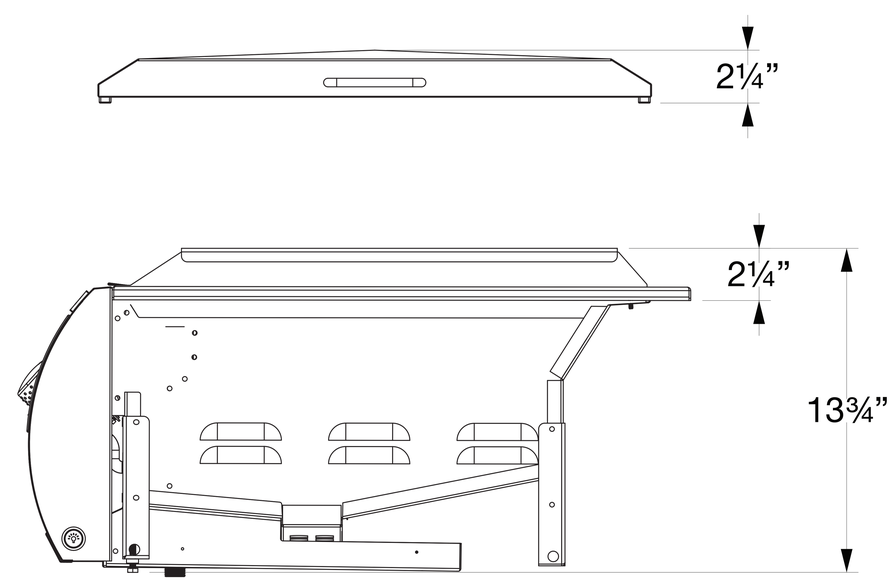

FIREMAGIC®

E660i-1T4N(P)

Echelon Built-In Gourmet Griddle