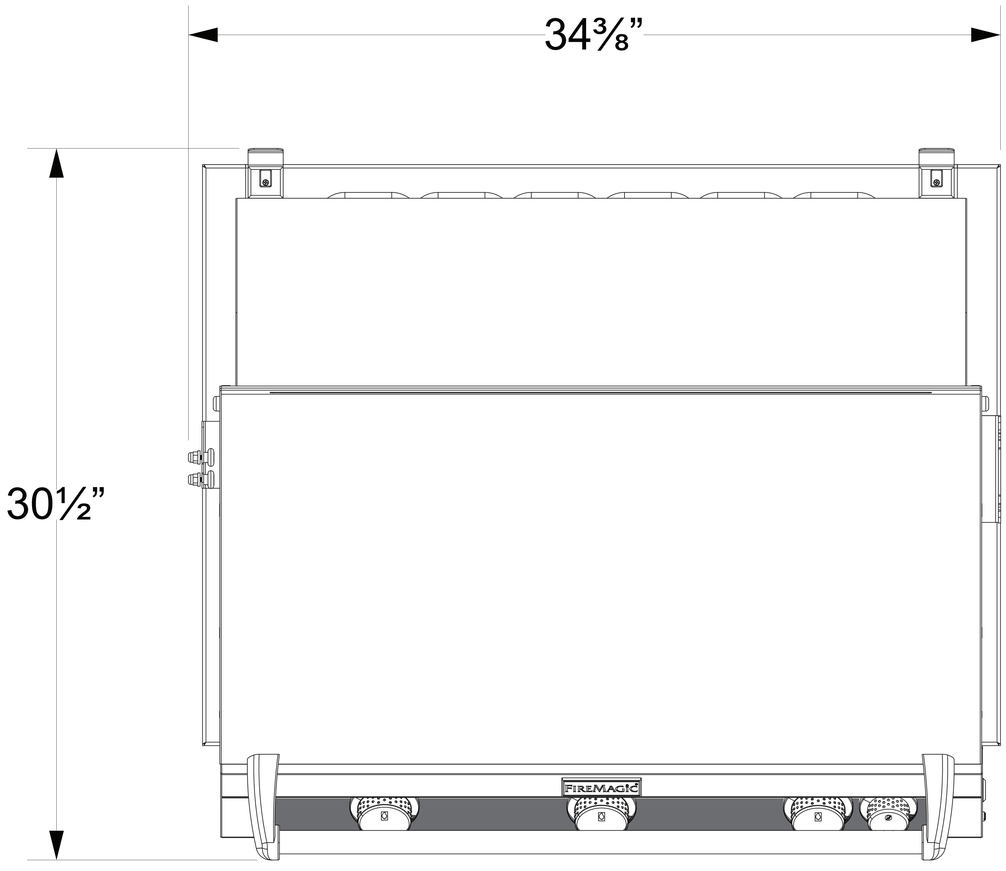

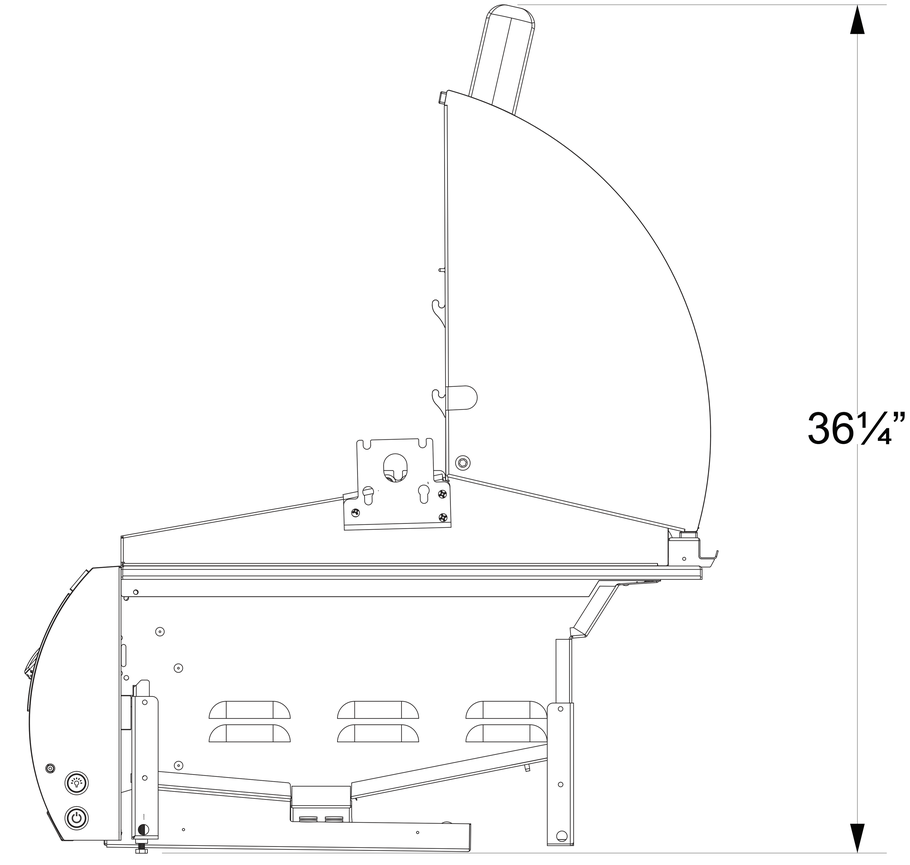

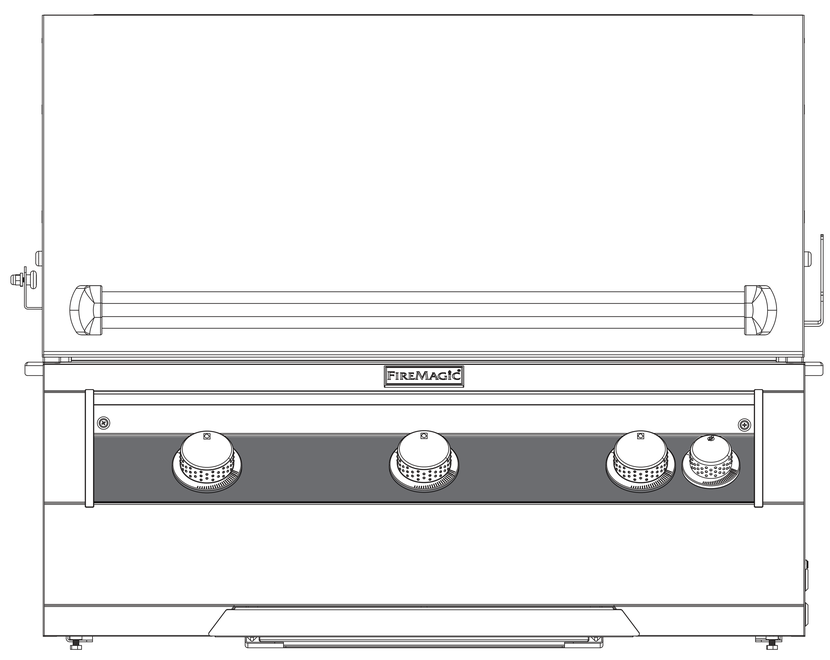

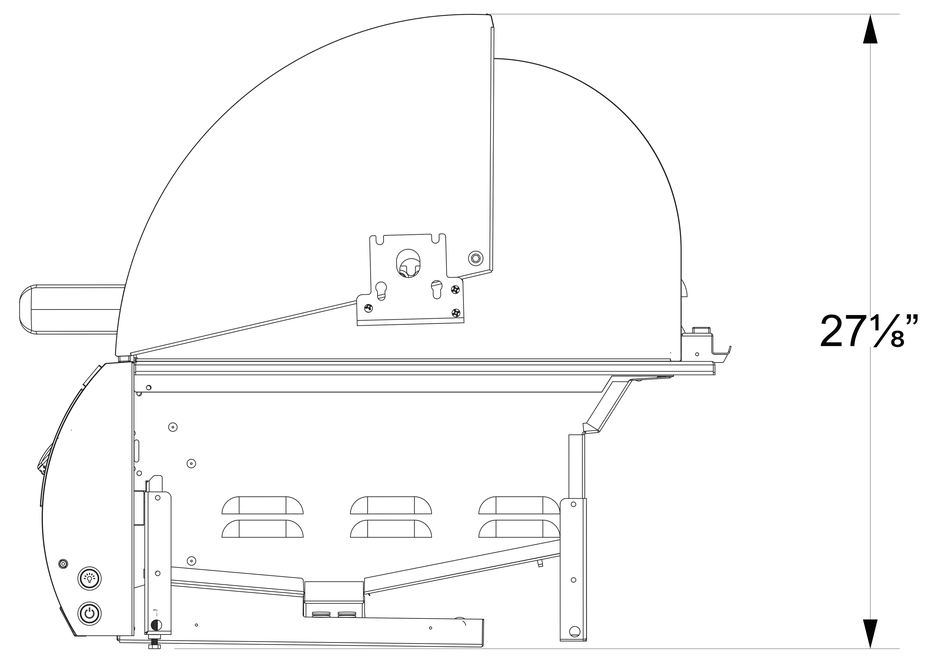

FIREMAGIC

E660i-9E1N(P) & E660i-9EAN(P)

34″ Echelon Built-In Grill (Digital & Analog)