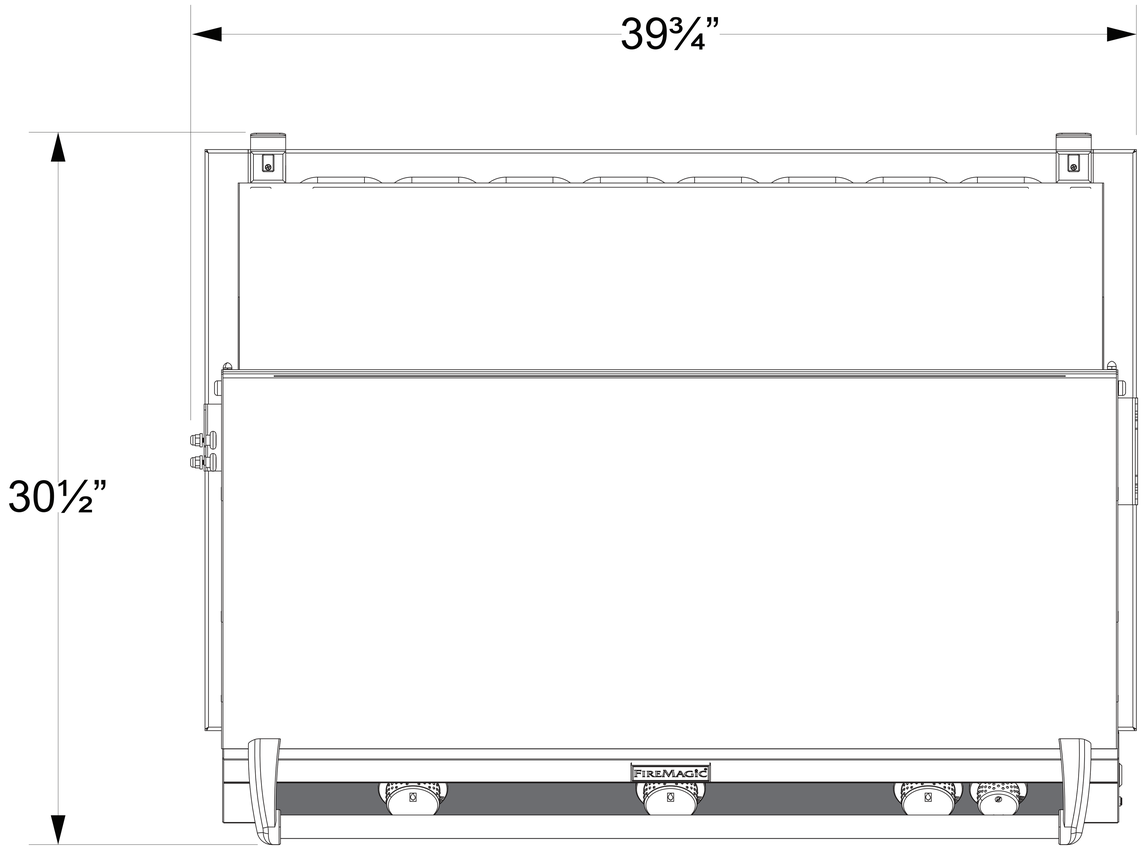

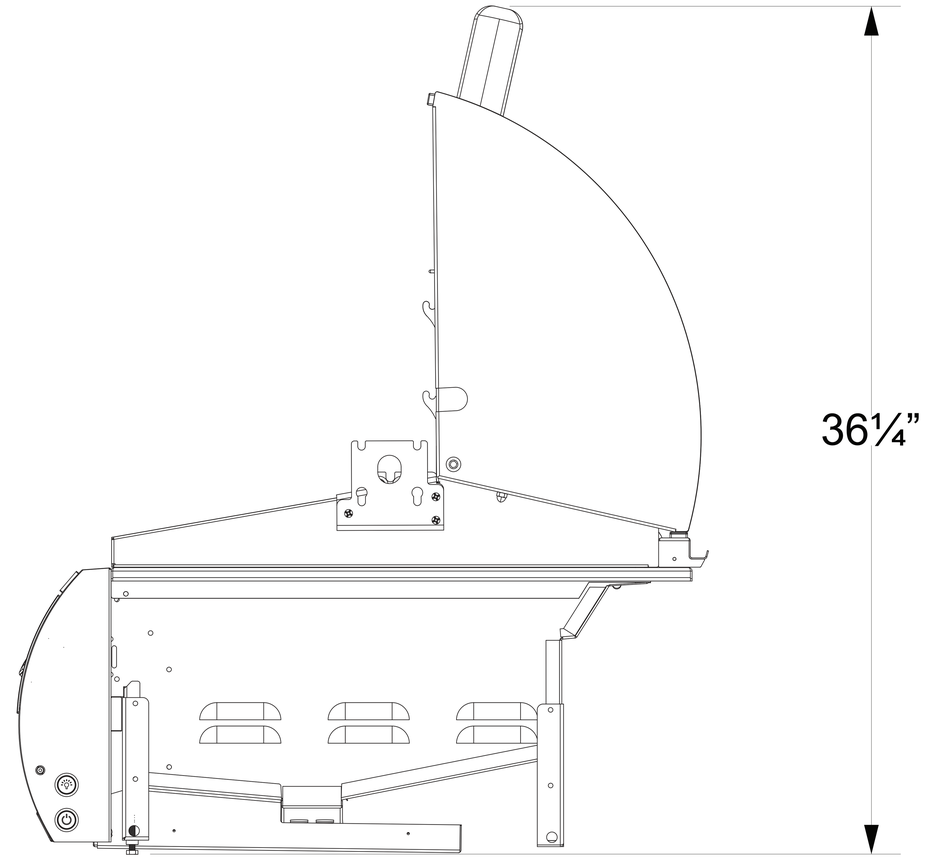

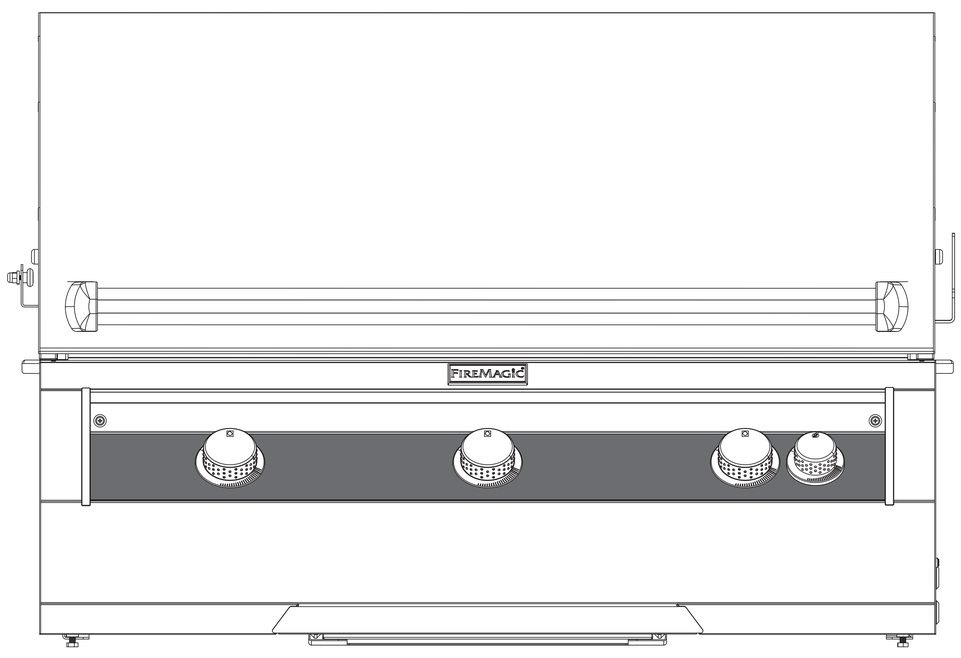

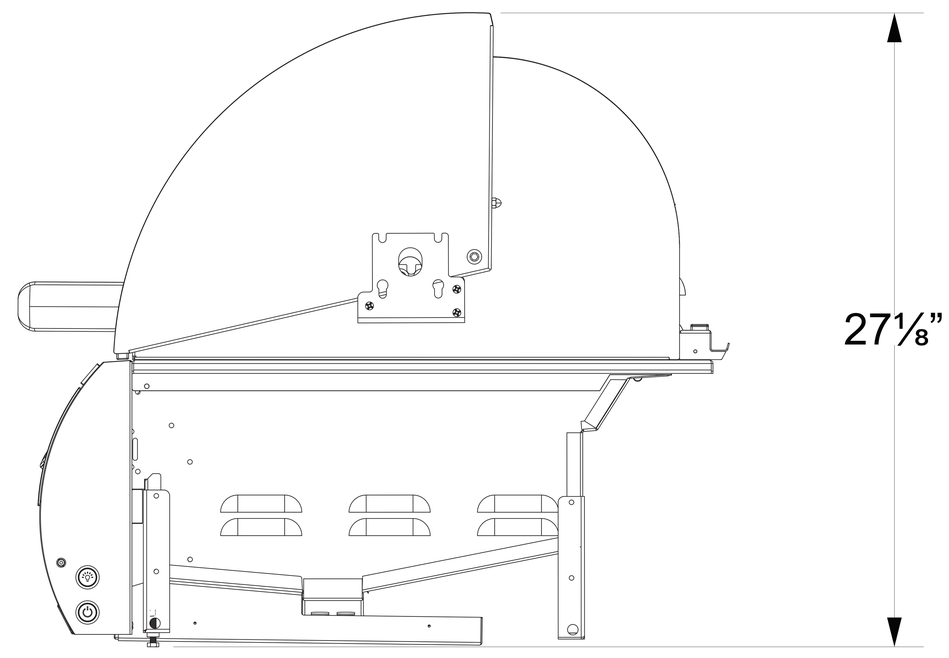

FIREMAGIC

E790i-9E1N(P) & E790i-9EAN(P)

40″ Echelon Built-In Grill (Digital & Analog)