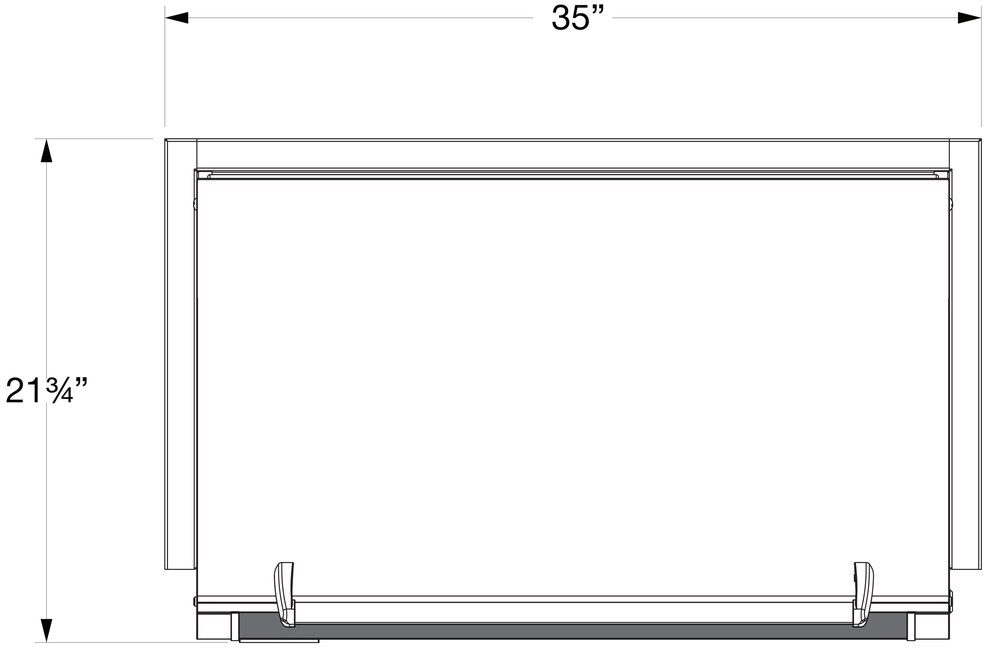

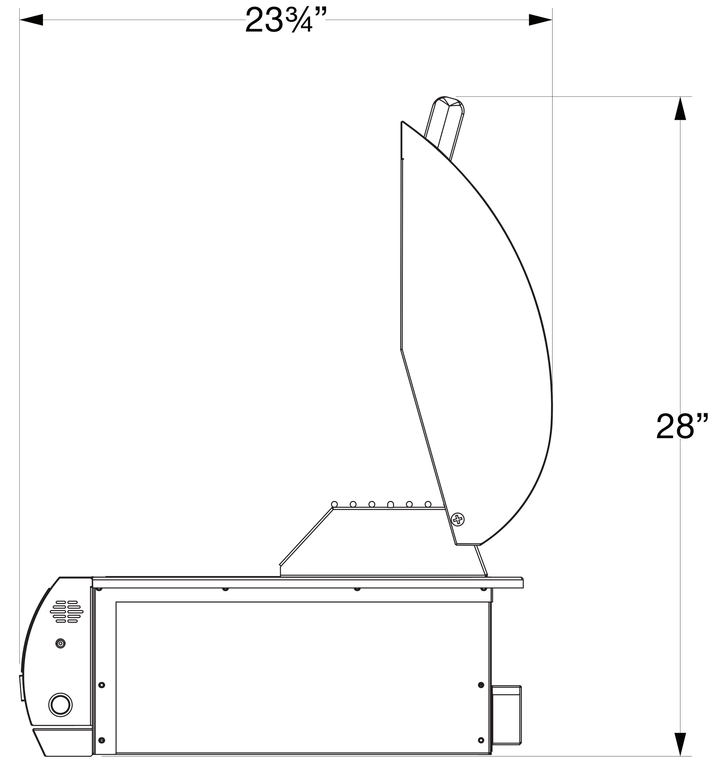

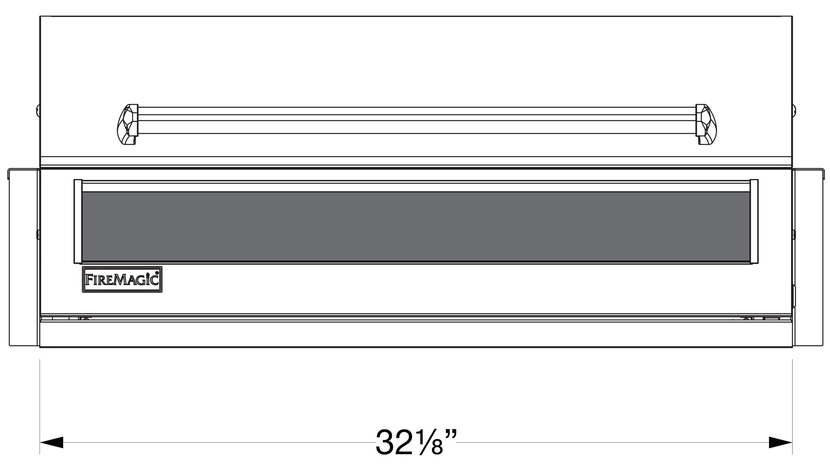

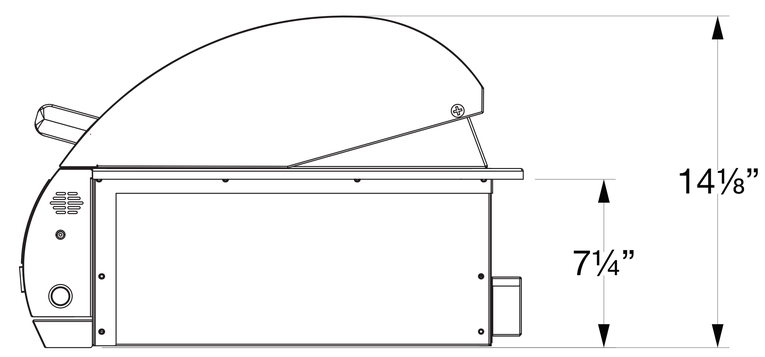

FIREMAGIC®

EL500i-4Z1E(-W) & EL500i-3Z1E

Electric Built-In Grill